6L "R" Style Rigid Pak Market Weight

0511 Series Mold Number(s): R430

A 6L oblong ("F" style) bottle made of High Density Polyethylene. The package is ideal for use as a shipping container for a wide range of Chemicals and numerous general uses.

PERFORMANCE SPECIFICATIONS

- No objection status for food contact applications from the Health Protection Branch in Canada and compliance for use in food contact applications by the Food and Drug Administration in the United States. Black bottles excluded.

DIMENSIONS

Capacity	**Rated**	6.0L	**Overflow (to top of neck)**	6.80L minimum
Weight	**Bottle Only**	230g +50g-15g		
Dimensions	**Length**	9.162"	**Width**	6.796"
	Height to neck	9.665"	**Height to handle**	9.965"
	Minimum Wall Thickness	0.023"		
Panel	**Height**	3.3"	**Circumference**	28.0"

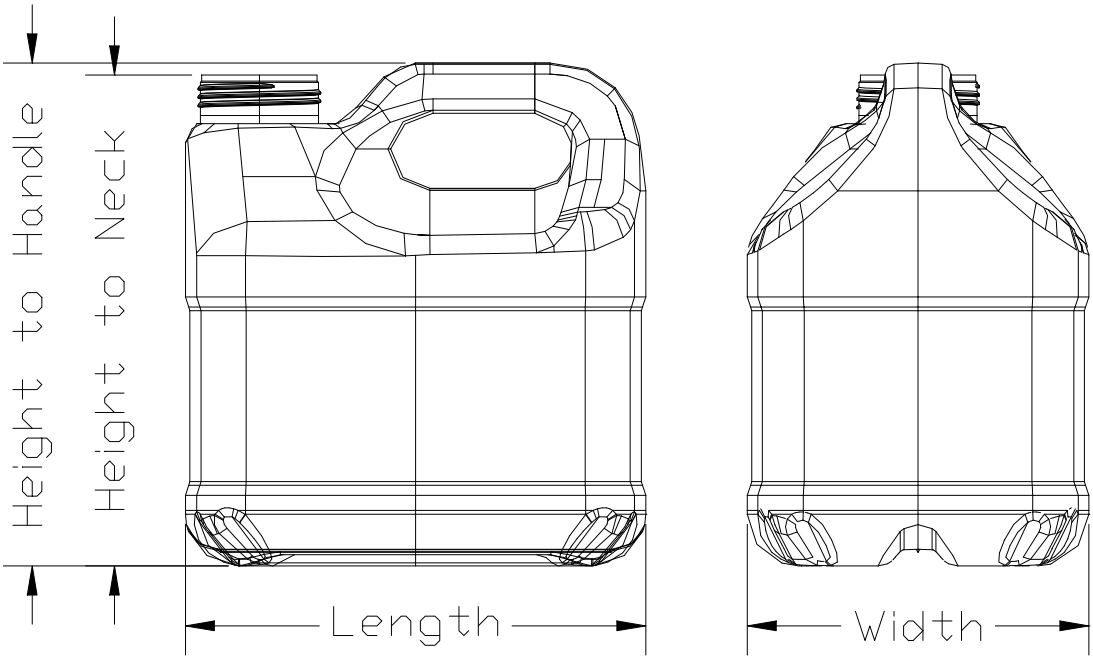

Shown with 63mm neck

SPECIAL FEATURES

Neck Finishes	Standard – 63mm neck designed for Rieke FS-632 and FS-641 Screw Caps Custom – 63mm neck designed for Rexam 63mm-DCR Cap Custom – 38mm neck designed for SP 400 caps.
Closures	Will accept induction seals. Spigots and vented caps available.
Decorating	Bottles may be flamed on the recessed panels to improve adhesion. Bottles may also be custom sleeved on line or post labelled at an extra charge.
Packaging	Bottles may be delivered in shipper cartons or palletized. Shipper carton quotes based on carton specifications.

FILLING RECOMMENDATIONS

- Compatibility of the bottle with the fill product is the responsibility of the filler.
- Contents should not exceed 70°C (158°F) at time of fill.
- Filled containers should not be stacked and stored above 50°C (122°F).

For **Stacking Recommendations** please contact the Reliance Quality Department at (204) 633-4403 ext. 229

PACKAGING AND SHIPPING DATA

	Bulk
Quantity Per Pallet	175 pieces
Package Weight	99.8 lbs.
Shipping Dimensions (L x W x H)	47.75" x 46.25" x 50.60"
Shipping Volume (Cubic Feet)	64.7

Packaging includes top and bottom corrugate trays, secured with strapping and stretch wrap.

WARRANTY

Reliance Products L.P. warrants product to meet the above specifications and to be free from defect in workmanship and materials at time of shipment. Liability is limited to the replacement cost of the containers purchased. Reliance Products LP does not test specific product packaging requirements and as such, customers are required to assure packaging meets the legal, environmental and containment needs of the product being packaged.

PRODUCT RANGE

Reliance Products L.P. has many decades of experience manufacturing a wide range of both injection and blow moulded plastic shipping containers, including:

Bottles	1L to 23L	Tighthead Containers	10L to 23L
Pails	4L to 23L	Collapsible Containers	10L to 25L

Call us for all of your related packaging needs

Reliance Products L.P. believes the enclosed information to be true and accurate, however we disclaim any liability for the use of the information and data